ECE 512: POWER SYSTEM PROTECTION

Final Report

OPTIMAL COORDINATION OF DIRECTIONAL OVERCURRENT RELAYS CONSIDERING DEFINITE TIME BACKUP RELAYING

Submitted by:

A.L.N.Prasanth (203806414)
Uday kiran (203799186)

Instructor: Prof. Dr. Kourosh sedghisigarchi

Table of Contents

Sr. No	Content	Page No.
1	Introduction	3
2	Theory	4
	2.1 Review of the DOCR	5
	2.2 System modeling	5-6
	2.3 Time current characteristics	7
	2.3 Test case 1	8
	2.4 Test case 2	9
3	Results	10-13
4	Conclusion	14
5	References	15

1. Introduction:

The problem of determining Time dial setting optimization for directional overcurrent relays (DOCR) has been extensively studied using linear programming since 1987, ensuring optimal settings while satisfying time coordination constraints. This includes situations with permanent topology changes and dynamic changes during fault clearing. However, existing research focuses solely on DOCR coordination and does not address the coordination of DOCR with other relay types, such as distance relays, commonly used as primary protection in sub-transmission and transmission power systems (as shown in Figure 1).

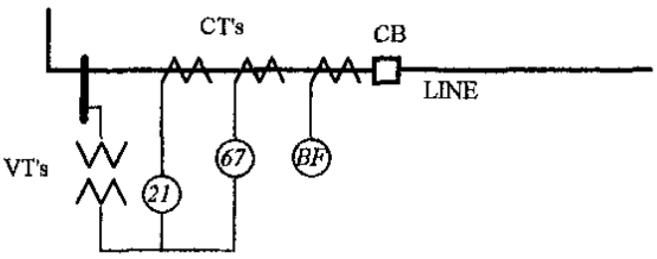

Figure 1. Line protection scheme using distance relays (21), directional overcurrent relays (67) and breaker failure relays (BF).

Distance relay schemes are implemented according to the instantaneous-first-zone and delayed-second-zone schemes. This second zone represents a definite time backup protection, and its operation time is over 300 ms. Additionally, there are systems where local backup relays are used to minimize the dangerous effects of a breaker failure. A breaker failure relay consists of a definite-time overcurrent unit with a control unit to confirm the breaker failure condition. Fig. *2* shows a typical time-distance coordination scheme for a system with only distance and breaker failure relays (BFR). Notice that the presence of BFR requires that second zone time *(tz2)* be greater than for those cases for which BFR is not used. This leads to the fact that the second zone operation time must be at least the operation time of the breaker failure relay *tBp*(typically 0.2L0.3 s.) plus a security margin *(sm)*which could be about 0 3 s. The main goal of this article is to state the optimal coordination problem of directional overcurrent relays (DOCR) including the constraints imposed by distance relays and breaker failure relays.

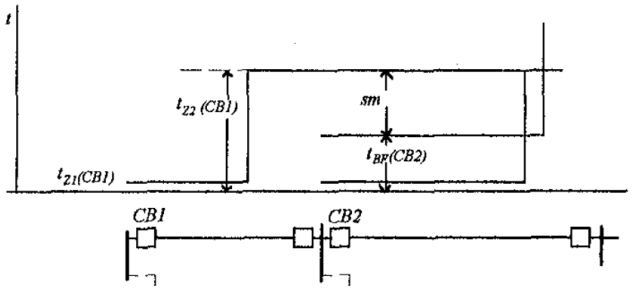

Figure 2. Distance relay and BF timing (DOCR not shown)

2. THEORY

2.1 Review of the DOCR:

The revision of the notation and concepts presented in the past gives a better coherency to this paper. To achieve the standard formulation of a linear programming problem, it is essential to use the equation for the inverse-type overcurrent relay time curve which separates the time dial setting from the pick-up current settings as follows

$$t_i(Fp) = f_i(M_i(Fp))g_i(D_i) = e_{ip}x_i$$

where:

$t_i(Fp)$ = operation time of relay i for a given fault Fp.

$M_i(Fp)$ = multiple of the pick-up current of relay i for f

Fp.

D_i = time dial setting of relay i.

$x_i = g_i(D_i)$

$e_{ip} = f_i(M_i(Fp))$

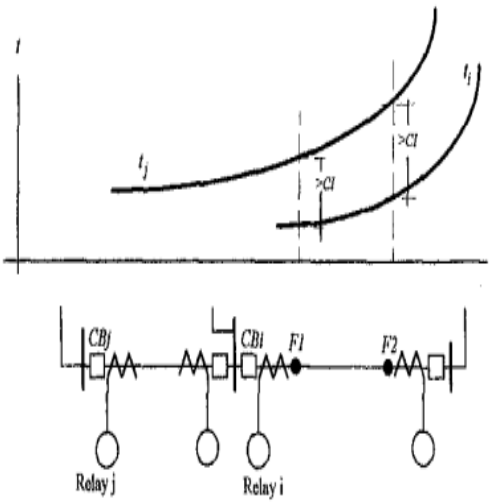

Figure 3. DOCR timing including only the inverse-time time-current curves

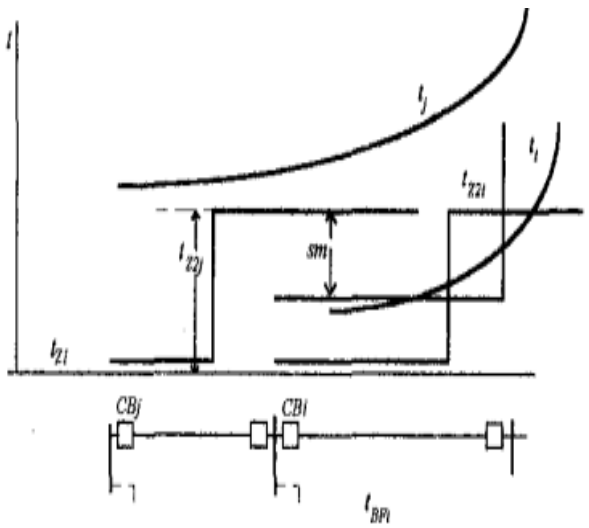

2.2 System Model:

1. Components: Model power system elements: Generators, Transmission Lines, Loads.

Represent relay components: DOCRs and Definite Time Backup Relays.

2. Logic and Communication:

Define coordination logic and communication paths between relays.

3. Simulation Software:

Utilize ETAP or similar software for system simulation.

Input relay settings, system parameters, and fault scenarios.

4. Optimization:

Employ a Linear Programming Solver to optimize relay settings.

Integrate an adjustment mechanism based on optimization outcomes.

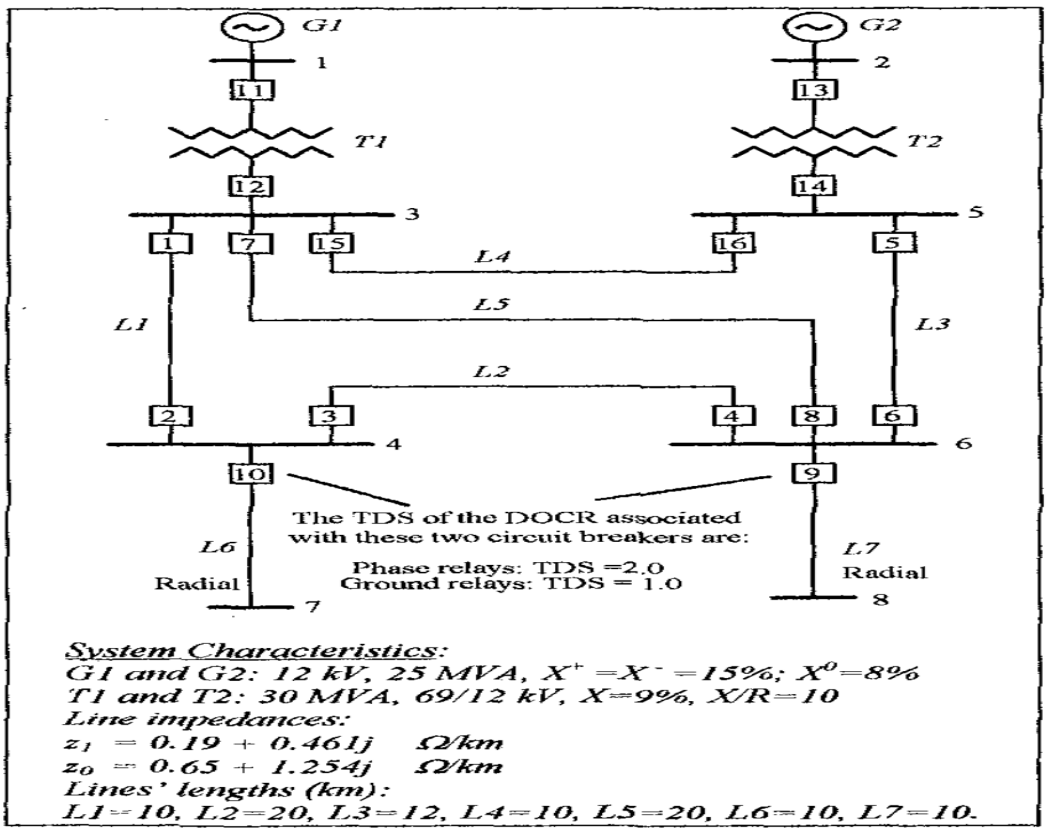

Figure 7. Test case

Displayed below is an elucidation of the system construction process facilitated through the use of ETAP software

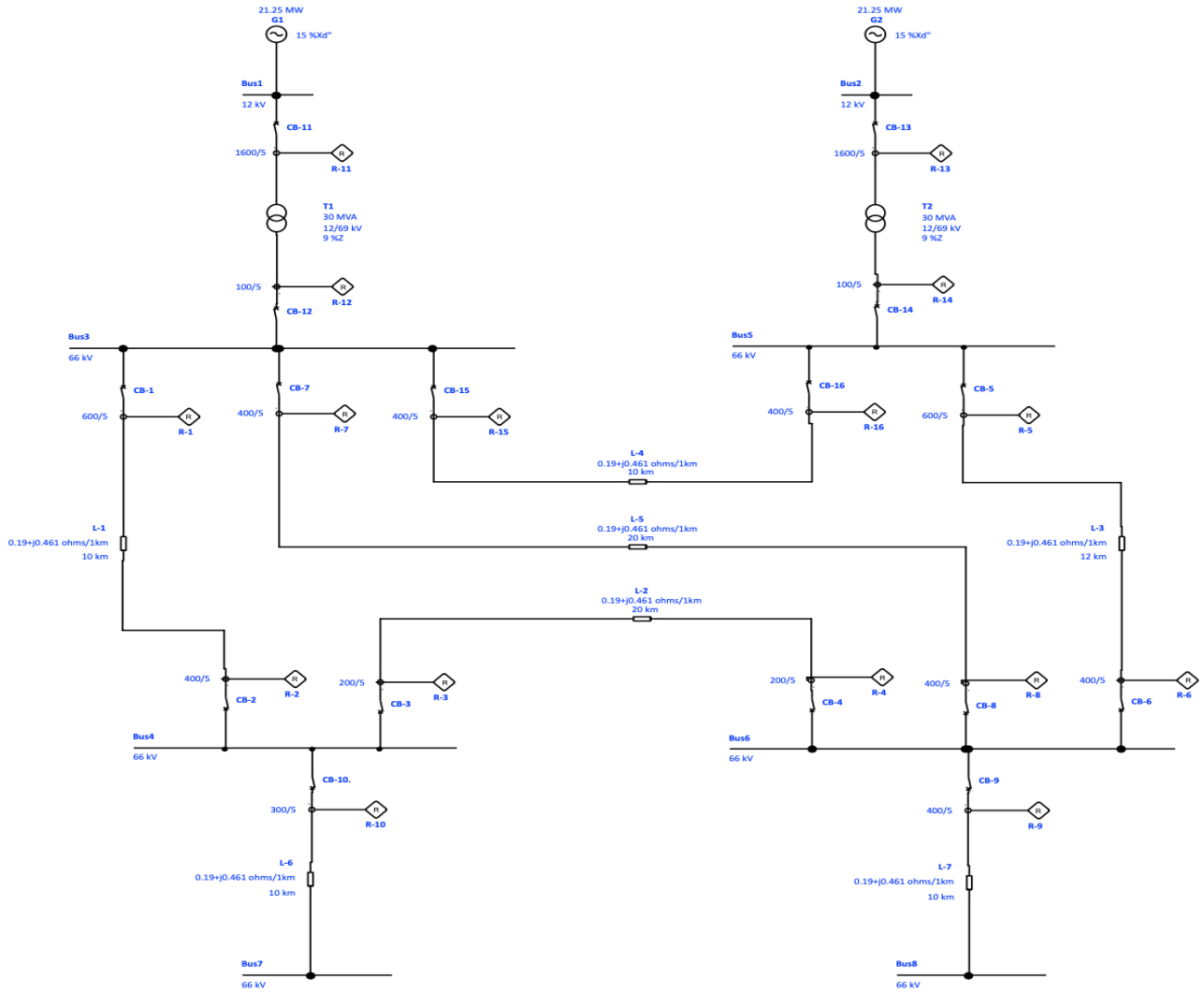

page 1 12:36:05 Dec 01, 2023 Project File: Optimal Coordination

The construction involved the incorporation of two generators, two transformers, eight buses, and seven transmission lines.

2.3 Time current characteristics

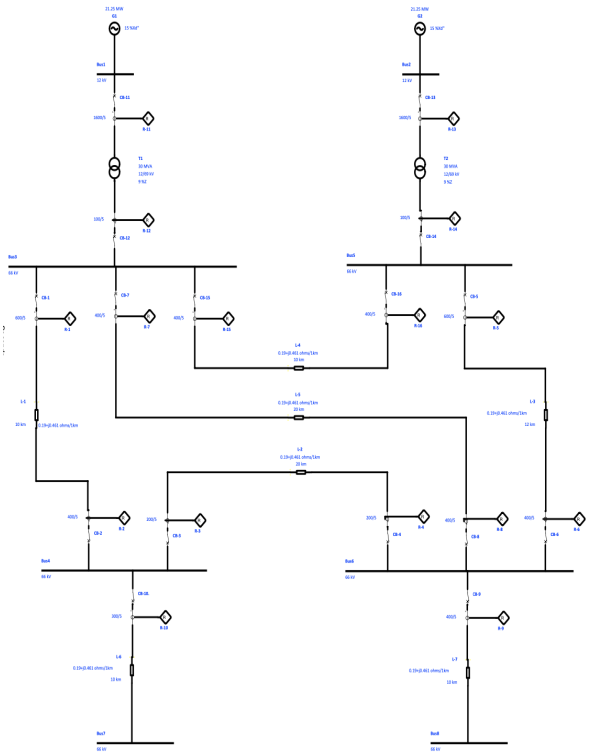

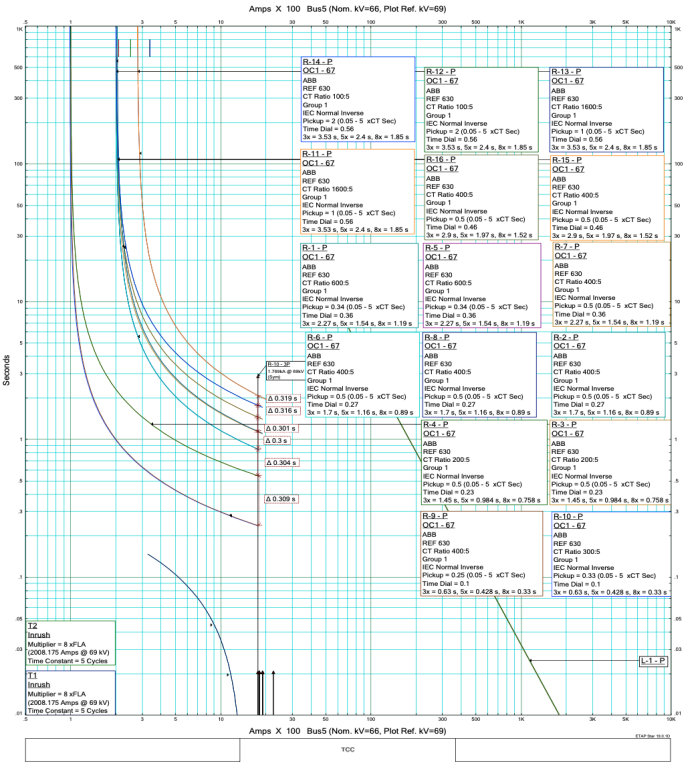

The system is connected to phase. from below you can observe the time characteristics when the system is connected to ground

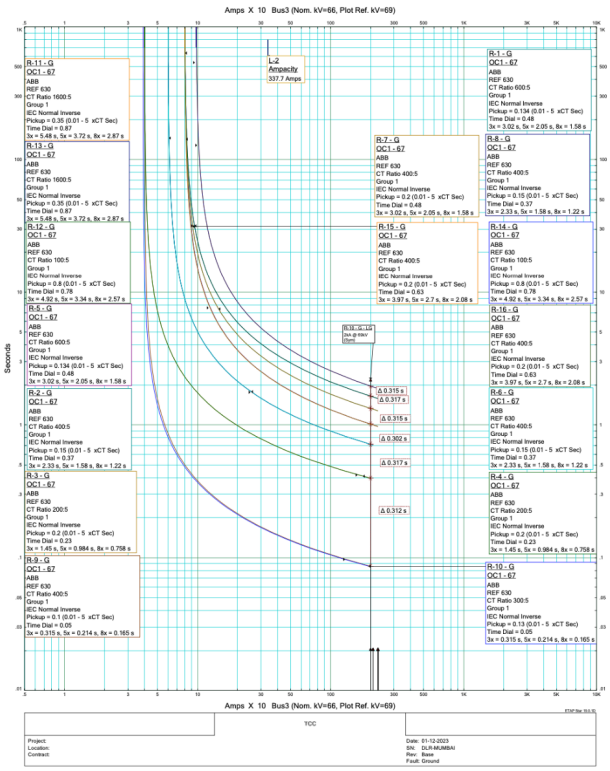

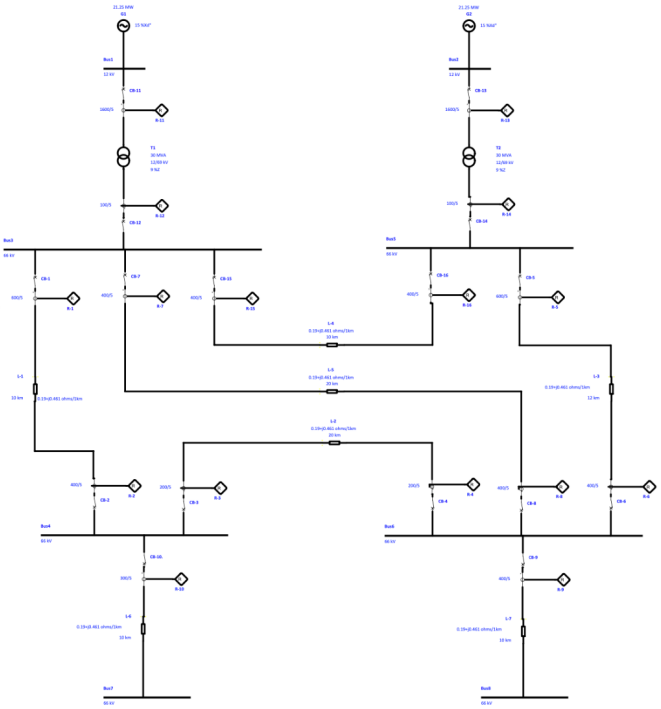

2.4 Test case:

The methodology observed in the project was applied to the system above. This system consists of 2 generators, 2 Y-Y power transformers, 9 buses, and 7 lines. The pick-up current settings (@) and the current transformer ratios (CTR) are given in Table I (all relays have minimum TDS of 0.5 and maximum TDS of 11). Three cases are analyzed:
1) DOCR with only time delay units (similar to IBC51 type);
2) DOCR with time delay and instantaneous units (t = 0); and
3) DOCR with time delay and instantaneous units as the secondary protection, distance relays (DR) as the main protection, and breaker failure relays (BFR) as a local backup.

TABLE I.
DOCR Relay basic data

CB	CTR	Phase relays	Ground relays
		Ip (A)	*Ip (A)*
1	600/5	5.0	1.0
2	400/5	5.0	1.0
3	200/5	5.0	1.0
4	200/5	5.0	1.0
5	600/5	5.0	1.0
6	400/5	5.0	1.0
7	400/5	5.0	1.0
8	400/5	5.0	1.0
9	400/5	5.0	1.0
10	300/5	5.0	1.0
11	1600/5	5.0	1.0
12	100/5	5.0	1.0
13	1600/5	5.0	1.0
14	100/5	5.0	1.0
15	400/5	5.0	1.0
16	400/5	5.0	1.0

2.5 Test case 2:

Consider the DOCR(including instantaneous units and distance relays as 0.8 sec & phase relays as 0.6 sec for ground relays and breaker failure relays as 0.3 sec

DOCR (including instantaneous units),
Distance relays (DR) (t_{z2} =0.8 sec. for phase relays, t_{z2} =0.6 sec. for ground relays) and
Breaker failure relays (BFR) (t_{BF} =0.3 sec.)

CB	DOCR (67)				DR (phase)	DR (grnd.)
	Phase relays		Ground relays		(21)	(21)
	TDS	*Inst.(A)*	*TDS*	*Inst.(A)*	$t_{Z2}(s)$	$t_{Z2}(s)$
1	0.634	13	3.176	13	0.8	0.6
2	0.500	---	0.500	--	0.8	0.6
3	0.720	12	3.110	12	0.8	0.6
4	1.636	17	3.565	17	0.8	0.6
5	0.500	10	2.991	10	0.8	0.6
6	0.500	---	1.176	---	0.8	0.6
7	0.500	9	2.917	9	0.8	0.6
8	0.500	---	0.654	---	0.8	0.6
9	2.000	21	1.000	18	0.8	0.6
10	2.000	27	1.000	23	0.8	0.6
11	1.106	24	5.076	30	0.8	0.6
12	0.500	46	0.500	31	0.8	0.6
13	1.106	24	5.054	30	0.8	0.6
14	0.500	46	0.500	31	0.8	0.6
15	0.500	11	2.100	11	0.8	0.6
16	0.500	11	2.369	11	0.8	0.6

3. Results:

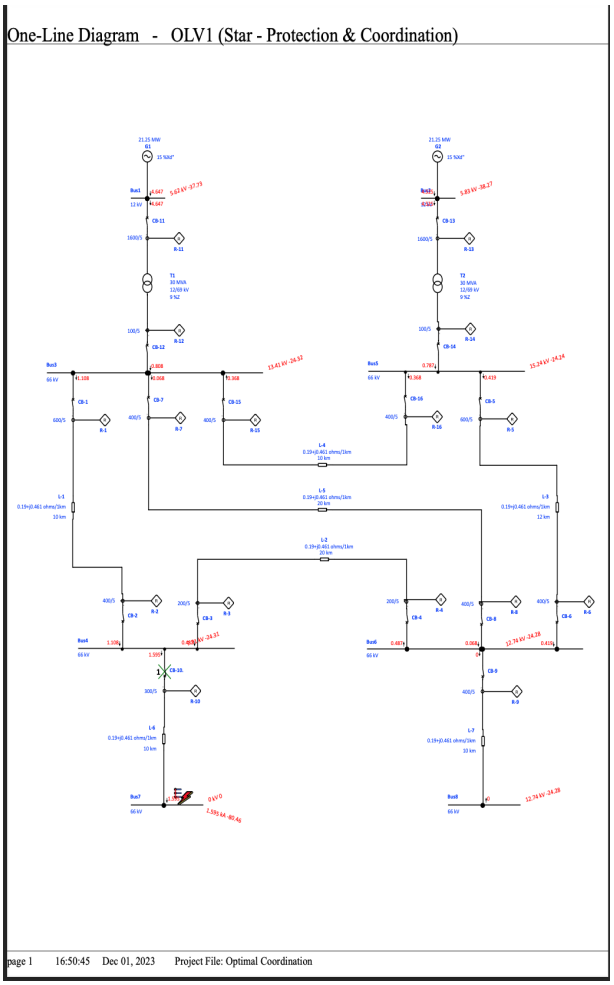

ou

Symmetrical 3-Phase Fault at Bus7.

Time (ms)	ID	If (kA)	T1 (ms)	T2 (ms)	Condition
245	R-10	1.595	245		Phase - OC1 - 51 - Forward
305	CB-10.		60.0		Tripped by R-10 Phase - OC1 - 51 - Forward
1001	R-4	0.487	1001		Phase - OC1 - 51 - Forward
1061	CB-4		60.0		Tripped by R-4 Phase - OC1 - 51 - Forward
1464	R-1	1.108	1464		Phase - OC1 - 51 - Forward
1524	CB-1		60.0		Tripped by R-1 Phase - OC1 - 51 - Forward
3475	R-5	0.419	3475		Phase - OC1 - 51 - Forward
3535	CB-5		60.0		Tripped by R-5 Phase - OC1 - 51 - Forward
3638	R-11	4.647	3638		Phase - OC1 - 51 - Forward
3698	CB-11		60.0		Tripped by R-11 Phase - OC1 - 51 - Forward
3732	R-13	4.525	3732		Phase - OC1 - 51 - Forward
3792	CB-13		60.0		Tripped by R-13 Phase - OC1 - 51 - Forward
5252	R-16	0.368	5252		Phase - OC1 - 51 - Forward
5312	CB-16		60.0		Tripped by R-16 Phase - OC1 - 51 - Forward

This shows a typical time-distance coordination scheme for a system with only distance and breaker failure relays. The horizontal axis represents the time in milliseconds, and the vertical axis represents the distance in kilometers or miles. The different curves represent the different relay operation times. The instantaneous first zone of the distance relay is the fastest operating zone, and it is typically set to operate within a few milliseconds of a fault. The delayed second zone of the distance relay is slower operating, and it is typically set to operate within a few hundred milliseconds of a fault. The breaker failure relay (BFR) is the slowest operating relay, and it is typically set to operate within a few tenths of a second of a fault.

The time coordination constraints ensure that the relays operate in the correct sequence to avoid unwanted tripping. For example, the second zone of the distance relay must be set to operate after the first zone, but before the BFR. This is to ensure that the fault is cleared as quickly as possible, but without unnecessarily tripping other relays.

The security margin (sm) is added to the BFR operation time to ensure that the relay has enough time to operate reliably, even in adverse conditions.

One-Line Diagram - OLV1 (Star - Protection & Coordination)

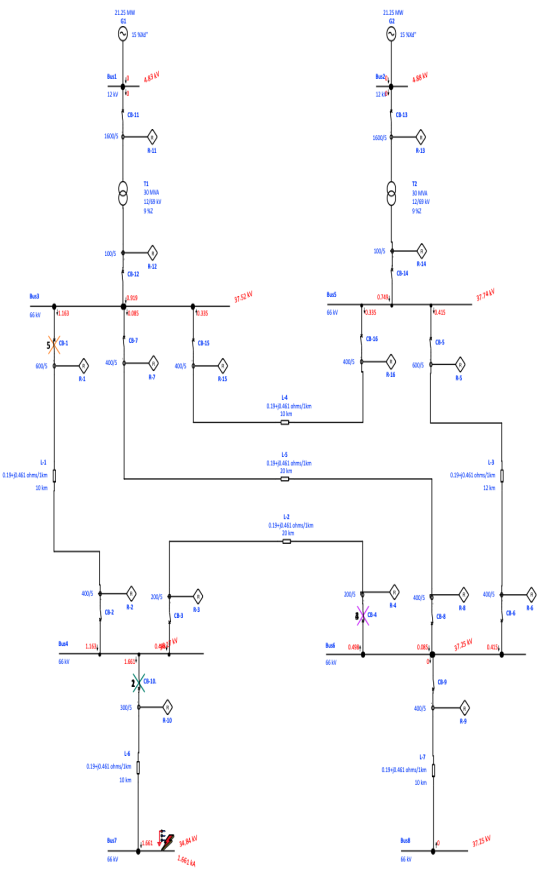

Sequence-of-Operation Event Summary Report

Symmetrical Line-to-Ground Fault at Bus7.

Time (ms)	ID	If (kA)	T1 (ms)	T2 (ms)	Condition
89.8	R-10	1.661	89.8		Ground - OC1 - 51 - Forward
150	CB-10.		60.0		Tripped by R-10 Ground - OC1 - 51 - Forward
241	R-10	1.661	241		Phase - OC1 - 51 - Forward
301	CB-10.		60.0		Tripped by R-10 Phase - OC1 - 51 - Forward
622	R-4	0.498	622		Ground - OC1 - 51 - Forward
682	CB-4		60.0		Tripped by R-4 Ground - OC1 - 51 - Forward
980	R-4	0.504	980		Phase - OC1 - 51 - Forward
1040	CB-4		60.0		Tripped by R-4 Phase - OC1 - 51 - Forward
1224	R-1	1.163	1224		Ground - OC1 - 51 - Forward
1284	CB-1		60.0		Tripped by R-1 Ground - OC1 - 51 - Forward
1427	R-1	1.157	1427		Phase - OC1 - 51 - Forward
1487	CB-1		60.0		Tripped by R-1 Phase - OC1 - 51 - Forward
2014	R-5	0.415	2014		Ground - OC1 - 51 - Forward
2074	CB-5		60.0		Tripped by R-5 Ground - OC1 - 51 - Forward
3035	R-16	0.335	3035		Ground - OC1 - 51 - Forward
3095	CB-16		60.0		Tripped by R-16 Ground - OC1 - 51 - Forward
3362	R-5	0.429	3362		Phase - OC1 - 51 - Forward
3422	CB-5		60.0		Tripped by R-5 Phase - OC1 - 51 - Forward
5289	R-16	0.366	5289		Phase - OC1 - 51 - Forward
5349	CB-16		60.0		Tripped by R-16 Phase - OC1 - 51 - Forward
6999	R-11	2.793	6999		Phase - OC1 - 51 - Forward
7059	CB-11		60.0		Tripped by R-11 Phase - OC1 - 51 - Forward
7333	R-13	2.723	7333		Phase - OC1 - 51 - Forward
7393	CB-13		60.0		Tripped by R-13 Phase - OC1 - 51 - Forward
59670	R-7	0.085	59670		Ground - OC1 - 51 - Forward
59730	CB-7		60.0		Tripped by R-7 Ground - OC1 - 51 - Forward

The fault on transmission line 4 caused the circuit breaker to trip, which isolated the fault. The bus coupler also opened to prevent the fault from spreading to other parts of the system. The whole system is connected to the ground settings

One-Line Diagram - OLV1 (Star - Protection & Coordination)

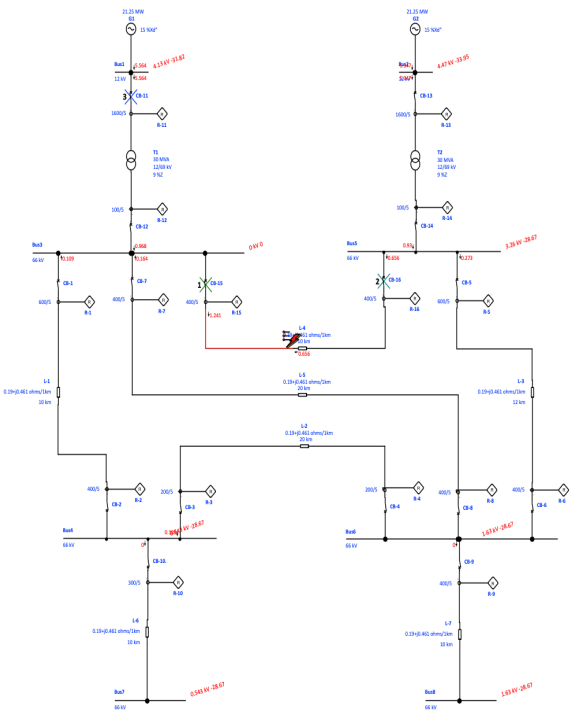

page 1 19:33:50 Dec 01, 2023 Project File: Optimal Coordination

Sequence-of-Operation Event Summary Report

Symmetrical 3-Phase Fault between CT7 and L-4. Adjacent to Bus3.

Time (ms)	ID	If (kA)	T1 (ms)	T2 (ms)	Condition
1732	R-15	1.241	1732		Phase - OC1 - 51 - Forward
1792	CB-15		60.0		Tripped by R-15 Phase - OC1 - 51 - Forward
2678	R-16	0.656	2678		Phase - OC1 - 51 - Forward
2738	CB-16		60.0		Tripped by R-16 Phase - OC1 - 51 - Forward
3106	R-11	5.564	3106		Phase - OC1 - 51 - Forward
3166	CB-11		60.0		Tripped by R-11 Phase - OC1 - 51 - Forward
3210	R-13	5.347	3210		Phase - OC1 - 51 - Forward
3270	CB-13		60.0		Tripped by R-13 Phase - OC1 - 51 - Forward
8572	R-5	0.273	8572		Phase - OC1 - 51 - Forward
8632	CB-5		60.0		Tripped by R-5 Phase - OC1 - 51 - Forward
17920	R-4	0.109	17920		Phase - OC1 - 51 - Forward
17980	CB-4		60.0		Tripped by R-4 Phase - OC1 - 51 - Forward

A fault occurred on transmission line 4, triggering the first circuit breaker. This action also disconnected the bus coupler and stopped the remaining overcurrent flow, which was connected to the phase.

One-Line Diagram - OLV1 (Star - Protection & Coordination)

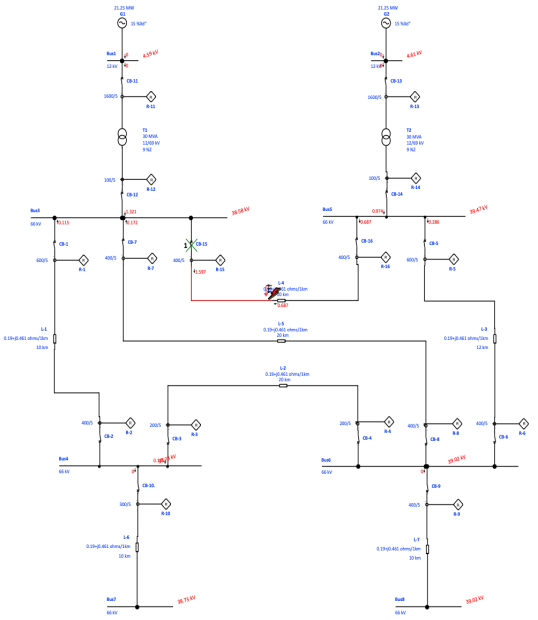

page 1 19:29:35 Dec 01, 2023 Project File: Optimal Coordination

Sequence-of-Operation Event Summary Report

Symmetrical Line-to-Ground Fault between CT7 and L-4. Adjacent to Bus3.

Time (ms)	ID	If (kA)	T1 (ms)	T2 (ms)	Condition
1429	R-15	1.597	1429		Ground - OC1 - 51 - Forward
1489	CB-15		60.0		Tripped by R-15 Ground - OC1 - 51 - Forward
1514	R-4	0.115	1514		Ground - OC1 - 51 - Forward
1555	R-15	1.521	1555		Phase - OC1 - 51 - Forward
1574	CB-4		60.0		Tripped by R-4 Ground - OC1 - 51 - Forward
1615	CB-15		60.0		Tripped by R-15 Phase - OC1 - 51 - Forward
2007	R-16	0.687	2007		Ground - OC1 - 51 - Forward
2067	CB-16		60.0		Tripped by R-16 Ground - OC1 - 51 - Forward
2401	R-16	0.751	2401		Phase - OC1 - 51 - Forward
2436	R-8	0.172	2436		Ground - OC1 - 51 - Forward
2461	CB-16		60.0		Tripped by R-16 Phase - OC1 - 51 - Forward
2496	CB-8		60.0		Tripped by R-8 Ground - OC1 - 51 - Forward
2612	R-5	0.286	2612		Ground - OC1 - 51 - Forward
2672	CB-5		60.0		Tripped by R-5 Ground - OC1 - 51 - Forward
3980	R-2	0.115	3980		Ground - OC1 - 51 - Forward
4040	CB-2		60.0		Tripped by R-2 Ground - OC1 - 51 - Forward
4434	R-11	3.843	4434		Phase - OC1 - 51 - Forward
4494	CB-11		60.0		Tripped by R-11 Phase - OC1 - 51 - Forward
4636	R-13	3.700	4636		Phase - OC1 - 51 - Forward
4696	CB-13		60.0		Tripped by R-13 Phase - OC1 - 51 - Forward
5859	R-5	0.313	5859		Phase - OC1 - 51 - Forward
5919	CB-5		60.0		Tripped by R-5 Phase - OC1 - 51 - Forward
7141	R-4	0.125	7141		Phase - OC1 - 51 - Forward
7201	CB-4		60.0		Tripped by R-4 Phase - OC1 - 51 - Forward

The fault on transmission line 4 caused the bus coupler to open, which stopped the flow of overcurrent to the phase. The circuit breaker then tripped to isolate the fault.

3. Conclusion:

The operation time coordination problem of directional overcurrent relays considering the operation times of the instantaneous units and the definite time backup units (second zone of distance relays and breaker failure relays) can be stated as an optimization problem and solved using linear programming techniques. The resultant time dial settings not only assure coordinated operation of the relays but also guarantee the minimum possible operation times. The presence of instantaneous units and definite time backup relays affects the mathematical formulation of the linear programming problem by generating additional linear restrictions that have to be included in the constraint set. The particular characteristics of these linear equations that have to be added to the optimization problem are described in the article for the case of instantaneous units, distance relays, and breaker failure relays. It was shown, with the aid of the test case, that the presence of instantaneous units is translated into smaller time dial settings, and therefore into faster operation times of the time-delay directional overcurrent units. The presence of the breaker failure relays from a mathematical point of view is reflected in the inclusion of additional lower hounds for the operation times of certain relays. Sometimes these hounds are not active.

Distance relays, however, introduce two types of constraints: lower limits as well as upper limits on the operation times of the directional overcurrent relays. The lower limit constraints, if they are active, may push the operation times of the directional overcurrent relays to higher values. However, the upper limit constraints may turn the problem into an infeasible problem, with no feasible solution. In this case, the possibility exists of increasing the second zone operation time of the critical distance relays, until a feasible solution is found, and the coordination of the protective system is achieved. If the resulting second zone operation time is out of the limits imposed by system requirements (stability, thermal damage, etc. the coordination criteria or the protection scheme would have to be modified.

The application of linear programming techniques for the time coordination of directional overcurrent relays considering definite time backup relaying proved to be a very useful tool for detecting and solving specific problems in realistic power systems with combined protection schemes.

4. Reference:

IEEE Transactions on Power Delivery, Vol. 14, No. 4, October 1991

L.G. Perez and A.J. Urdaneta “Optimal coordination of directional overcurrent relays considering time backup relays.

5. Appendix:

Please find the attached link below for the ETAP simulation video for the project.

https://drive.google.com/file/d/1KYK1VdFFOppaeYiZpKw-IwFjktJ_hube/view?usp=drivesdk